REVISIONS			
REV	DESCRIPTION	REV.BY	DATE

Decoration Tolerances

* Screen Print-Vertical Registration Tolerance = ±1.0mm
  Horizontal Registration Tolerance = ±1.0mm
* Hot-Stamping-Vertical Registration Tolerance = ±1.0mm
  Horizontal Registration Tolerance = ±1.0mm

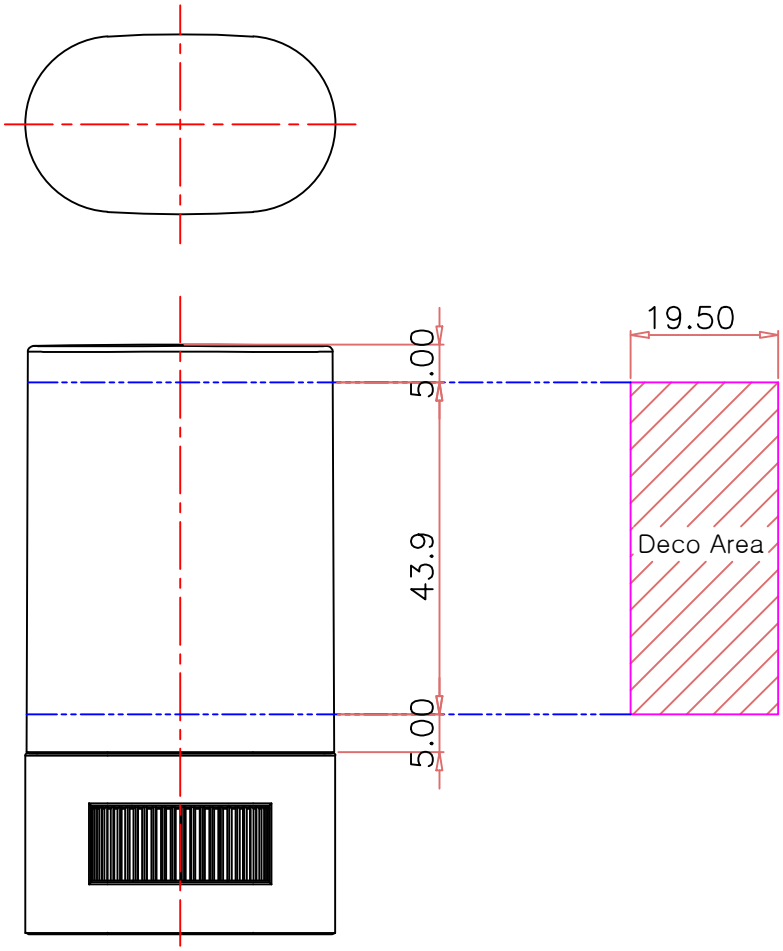

General Tolerance	
Dimension	Tolerance
0~10	±0.05
10~25	±0.1
25~50	±0.15
50~75	±0.2
75~100	±0.3
100~150	±0.5

DWG.NO	ST-TR-15-04	TOLERANCE	GT	UNIT	mm	MODEL NAME	ST-TR-15		
DWG.DATE	2020.02.19	MATERIAL	–	SCALE	1 : 1	DWG NAME	Deco Area		
				DESIGN	CHECKED BY	R & D	Q . C	SALES	REV
				H.K.KANG 2020.02.19	J.Y.KIM 2020.02.19	J.O.KIM 2020.02.19			